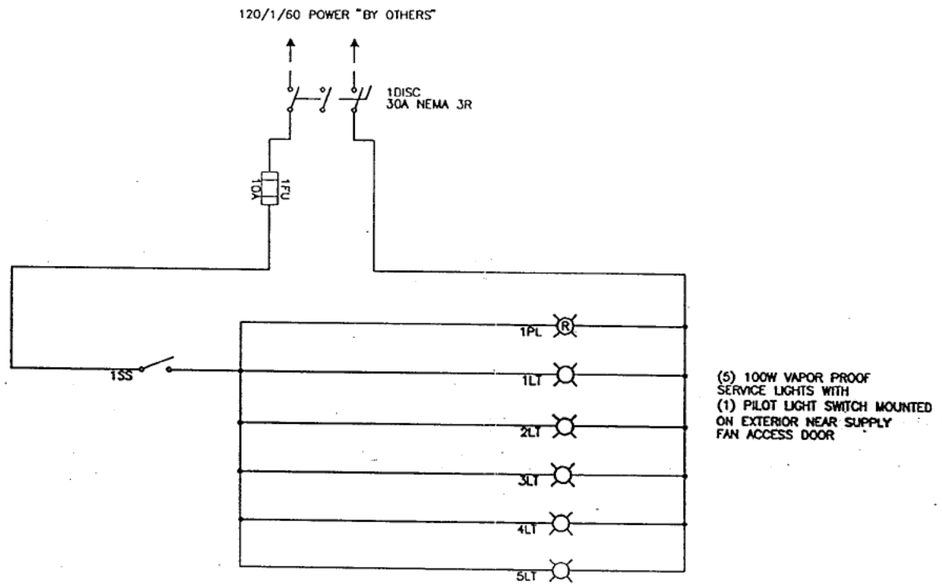

——— DENOTES FACTORY WIRING

— — — DENOTES FIELD WIRING

WIRING DIAGRAM SUBJECT TO CHANGE UNTIL "AS BUILT" ISSUE

FINAL AS BUILT	
ISSUE	
PREPARED BY	
ISSUE	
PREPARED BY	
APPROVED	
ISSUE	
PREPARED BY	
APPROVED	
ISSUE	
PREPARED BY	
APPROVED	
ISSUE 1	11/7/94
PREPARED BY	WRB
APPROVED	

MODEL:	RSA-06-E
TAG:	AH-5/AH-6 AH-8 THRU AH-12
SER. NO.:	29125/29126 29128 THRU 29132
DWG. NO.:	